


# PERCH TWIN BED
## BY OEUF

ASSEMBLY GUIDE

**WARNING** – Improper assembly or use of this product and the activity of climbing has risks that can lead to injury, paralysis, and even death. Read these instructions and warnings before installation and use!

**CONTACT US**
shop@grohplayrooms.com

**FIND MORE RESOURCES AT**
shopgrohplayrooms.com

READ ALL INSTRUCTIONS BEFORE USE CAUTION: ADULT ASSEMBLY REQUIRED

# ⚠WARNING

For ages 2 years +

## Suffocation and Strangulation Hazard.

## Death or Serious Injury Can Occur.

- Infants who cannot get in and out of an adult bed without help can be trapped between a mattress and a wall and suffocate. NEVER place infants in adult beds with or without a bed rail.
- BED RAIL USE: Bed rail can trap young children against mattress, headboard, or footboard.
- Use only for children who have outgrown a crib. NEVER use in place of crib.
- Use only with children who can get in and out of adult bed without help (typically 2 years and up).
- ALWAYS keep bed rail pushed firmly against mattress and at least 9 in. from headboard and footboard.
- DO NOT use a box spring mattress support when using a Bed Rail.

**Care & Maintenance**

- When cleaning your bed, use a non-toxic, non abrasive cleaner. Mix a solution of water with a small amount of a mild detergent. Apply to bed surface with a damp cloth.
- When moving the bed, always lifts the unit. Do not push or drag it to avoid damaging the base.
- It is important that the humidity levels in the room be controlled from extremes of too much humidity or too little. The bed should not be placed directly next to air-conditioning, outlets, fire places, radiators, space heaters, humidifiers, or dehumidifiers. Exposure to extreme variations of temperature and humidity can damage wood products.
- Keep the bed out of direct sunlight. UV rays may fade colors and in some cases darken them. It can cause crazing or hair line cracks in the finish. White finishes will darken naturally over time and exposure to direct sunlight will hasten this natural process along with some wood darkening; this is not considered to be a quality defect.
- If you need to put your bed in storage for any period of time do not store it in a damp or hot environment. Allow air flow around the furniture and do not stack anything on it.

Children can become trapped between the bed and the wall. To avoid risk of serious injury the distance between the bed and the wall must always be less than 65 mm or more than 230 mm.

## A UPPER BED components

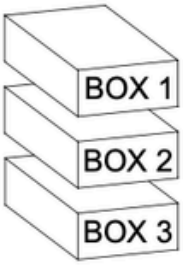


2PB01-01
2PB02-01

2PB00-02

2PB00-03



## B LOWER BED components




2PB00-04

2PB00-05

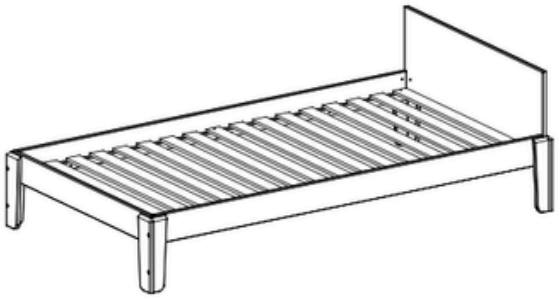

## A + B BUNK BED components

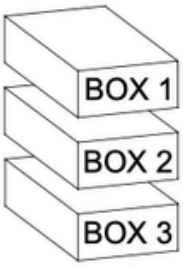


2PB01-01
2PB02-01

2PB00-02

2PB00-03

+




2PB00-04

2PB00-05

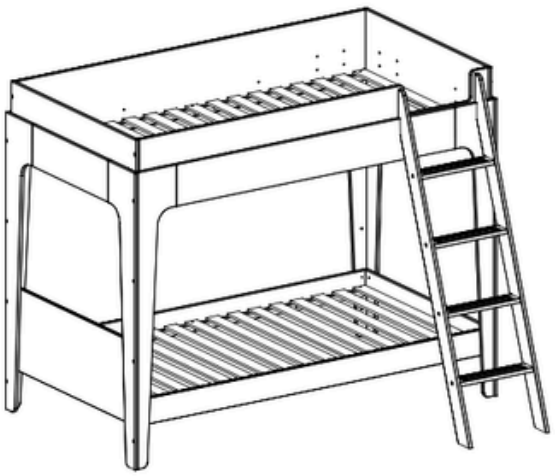

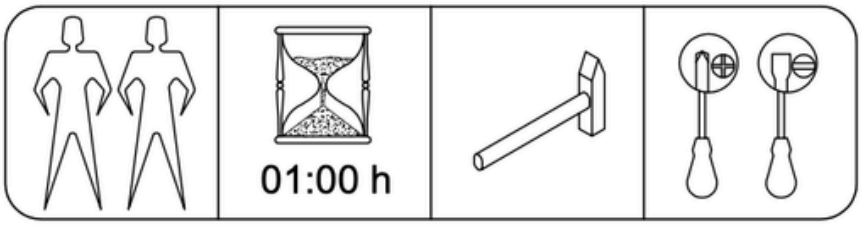


## Fittings List - LOWER BED

Liste des Pièces

PAGE 5-6

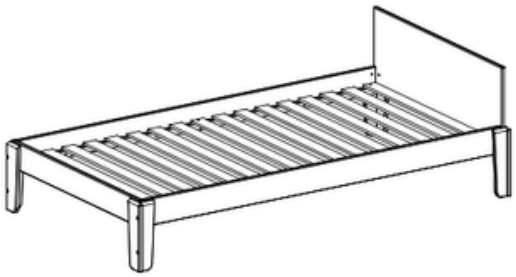



PAGE 7-10

| | | | | | |
|---|---|---|---|---|---|
| A |  # 8x40 | 8 pcs | H |  # 4x35 | 36 pcs |
| C |  M6x50 | 12 pcs | O | 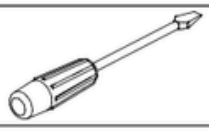 | 1 pcs |
| D |  M6x30 | 12 pcs | P |  | 16 pcs |
| F |  # 10x14 | 8 pcs | | | |

## BOX 4

LOWER BED components:
Long sides.

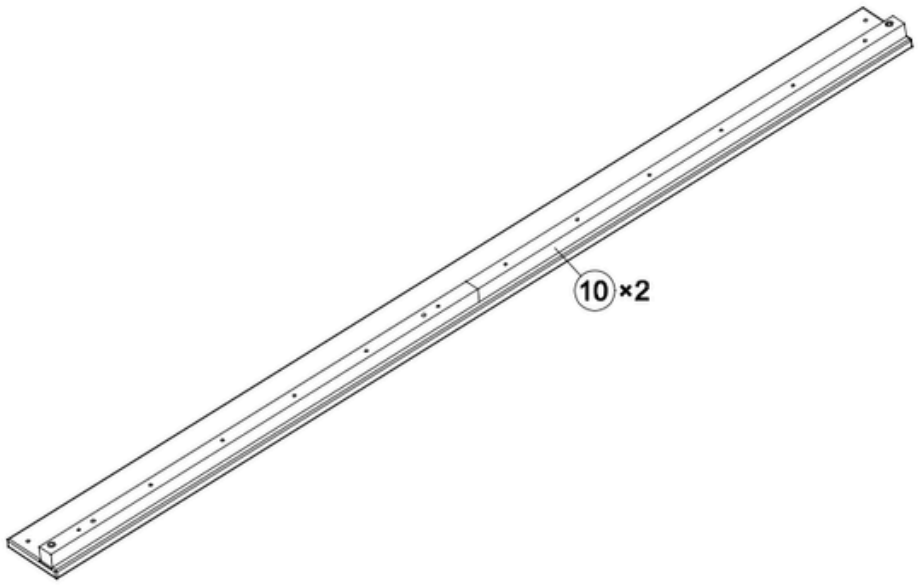


## BOX 5

LOWER BED components:
Short sides, legs, mattress suport.

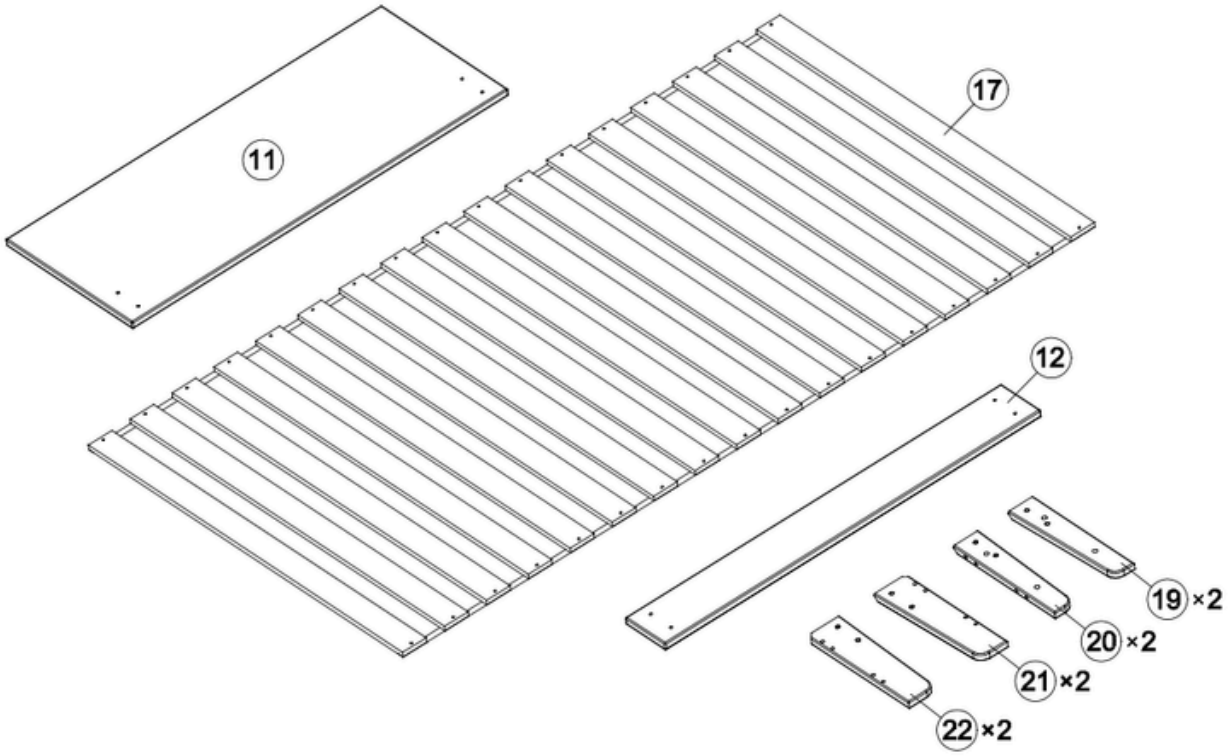

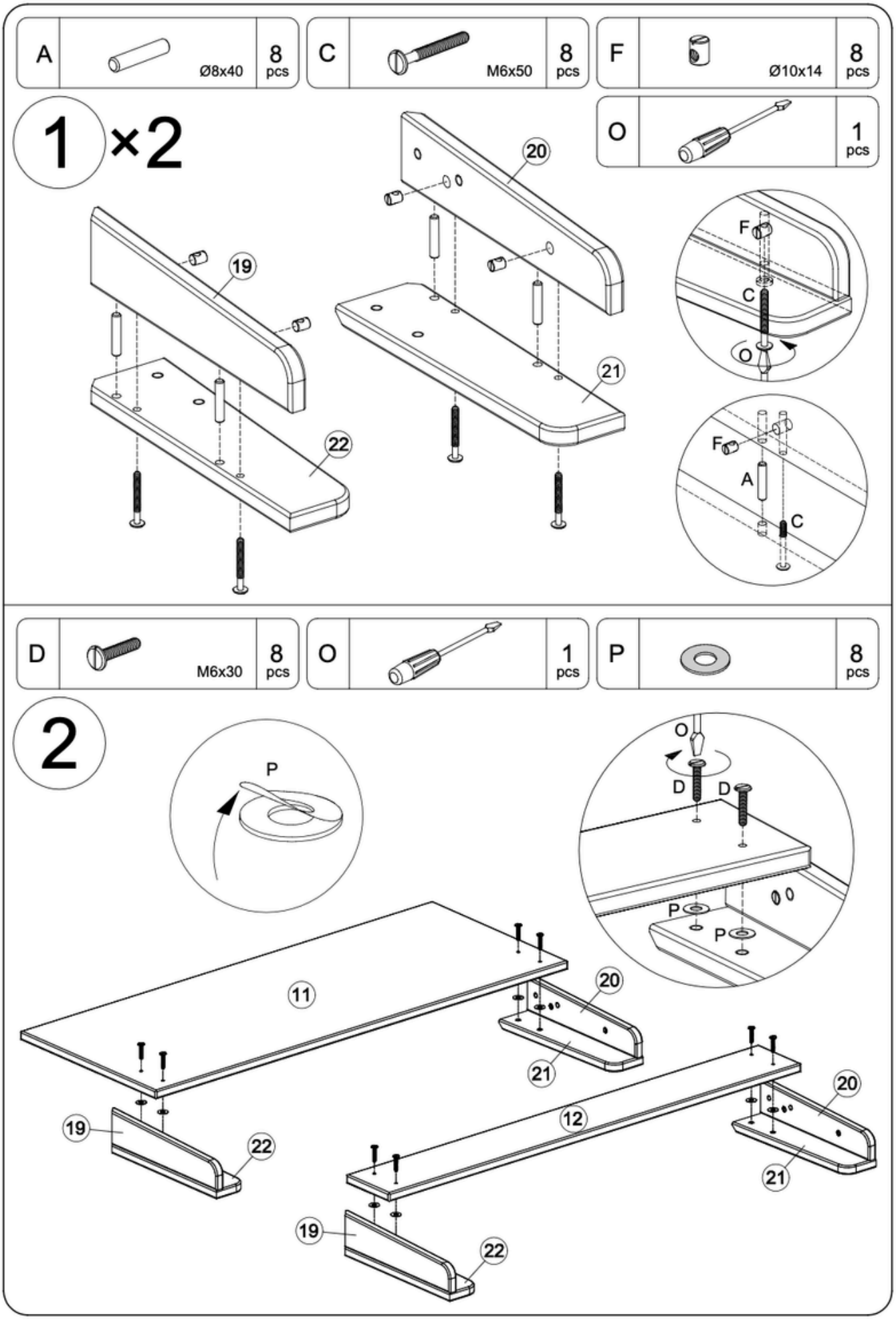
A
Ø8x40
8 pcs
C
M6x50
8 pcs
F
Ø10x14
8 pcs
O
1 pcs
1 ×2
20
19
21
22
F
C
O
F
A
C
D
M6x30
8 pcs
O
1 pcs
P
8 pcs
2
P
O
D
D
P
P
11
20
21
19
22
12
20
21
19
22

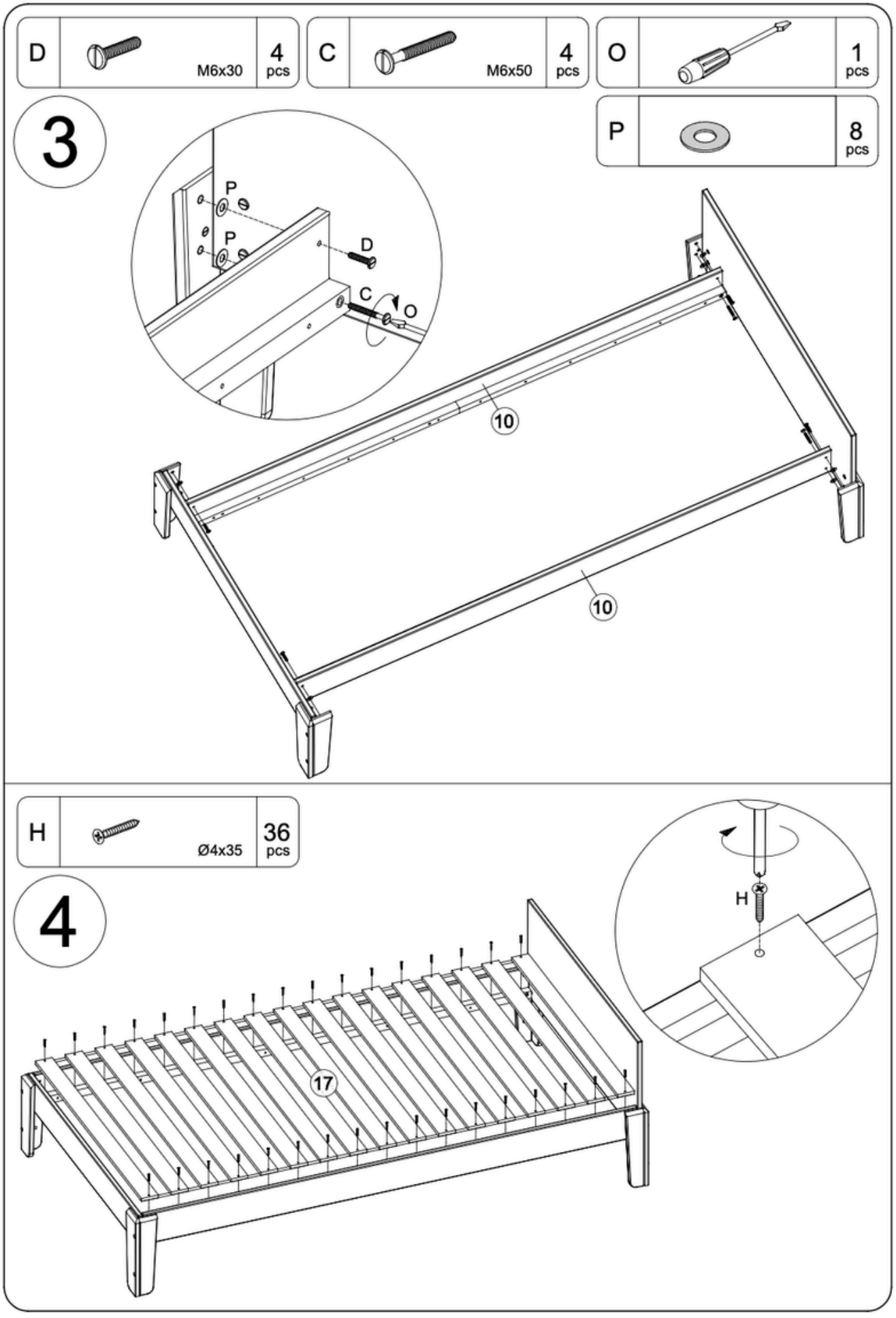
D
M6x30
4 pcs
C
M6x50
4 pcs
O
1 pcs
P
8 pcs
3
P
P
D
C
O
10
10
H
Ø4x35
36 pcs
4
H
17

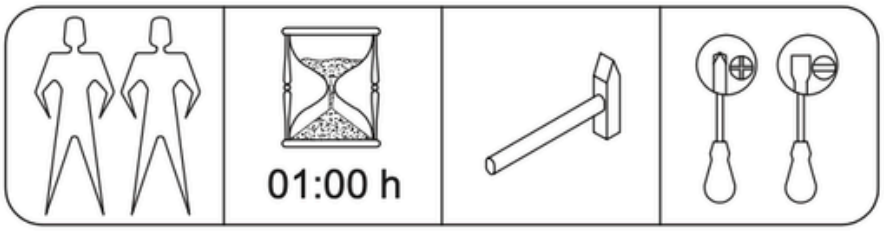


## BUNK BED

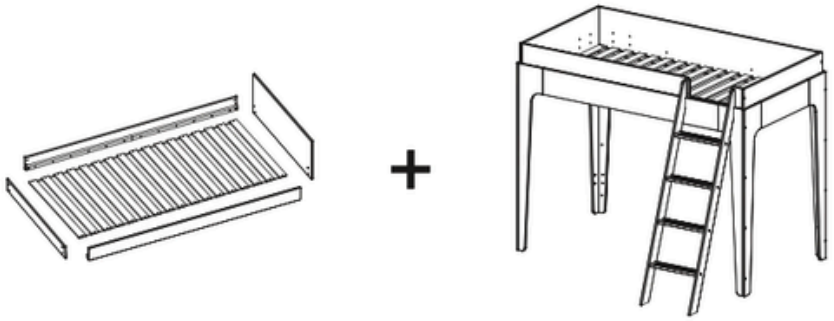

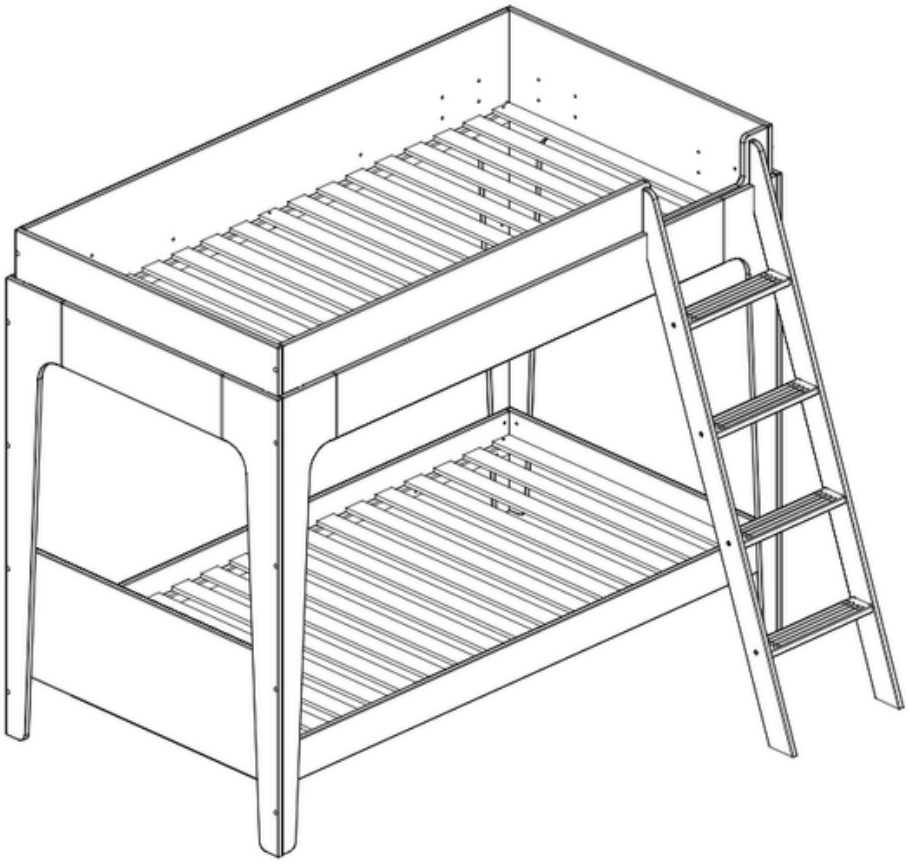

| | | | | | | | | |
|---|---|---|---|---|---|---|---|---|
| D |  | M6x30 | 8 pcs | O | 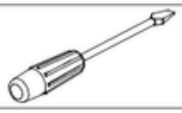 | | 1 pcs | P |  | 8 pcs |

1

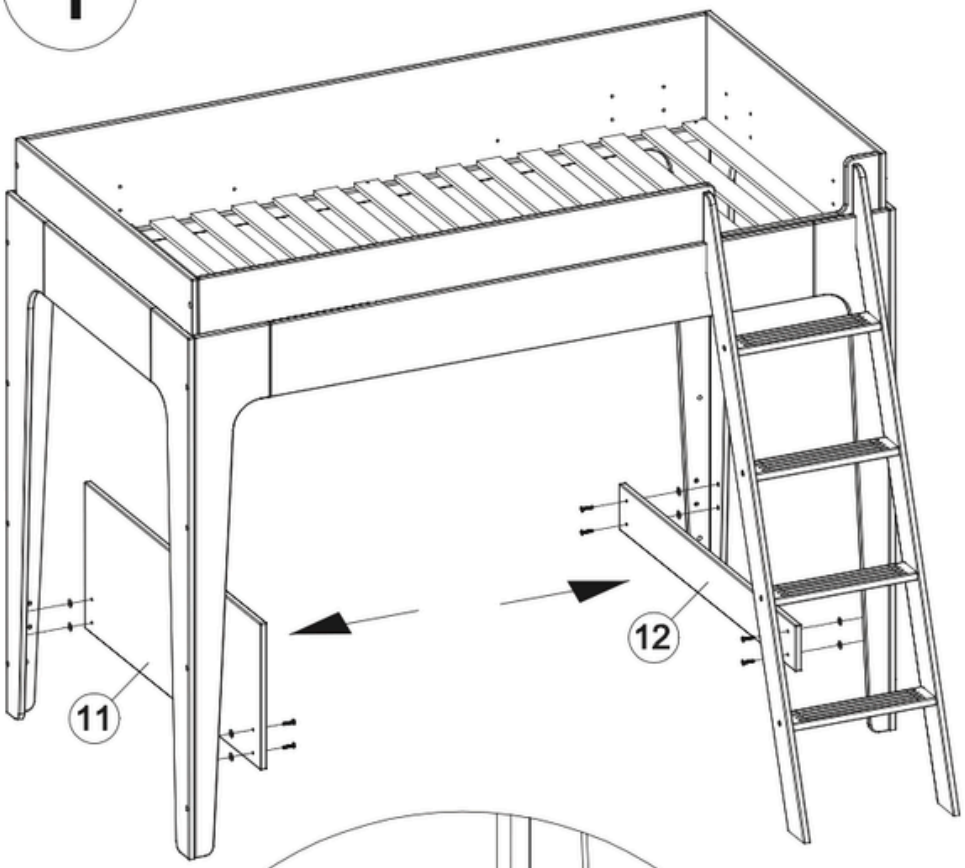


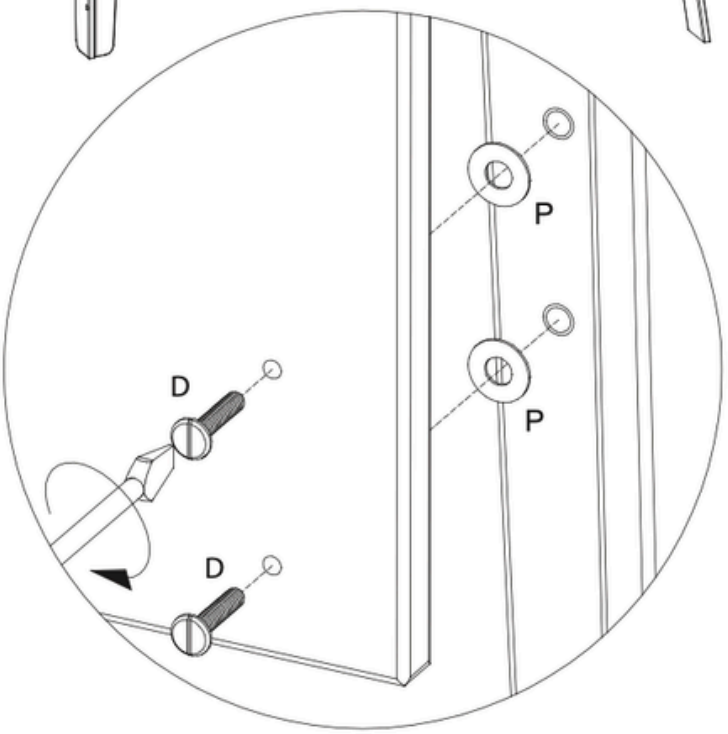

| | | | |
|---|---|---|---|
| C |  | M6x50 | 4 pcs |
| D |  | M6x30 | 4 pcs |
| O | 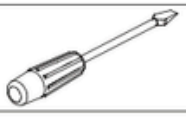 | | 1 pcs |
| P |  | | 8 pcs |

## 2

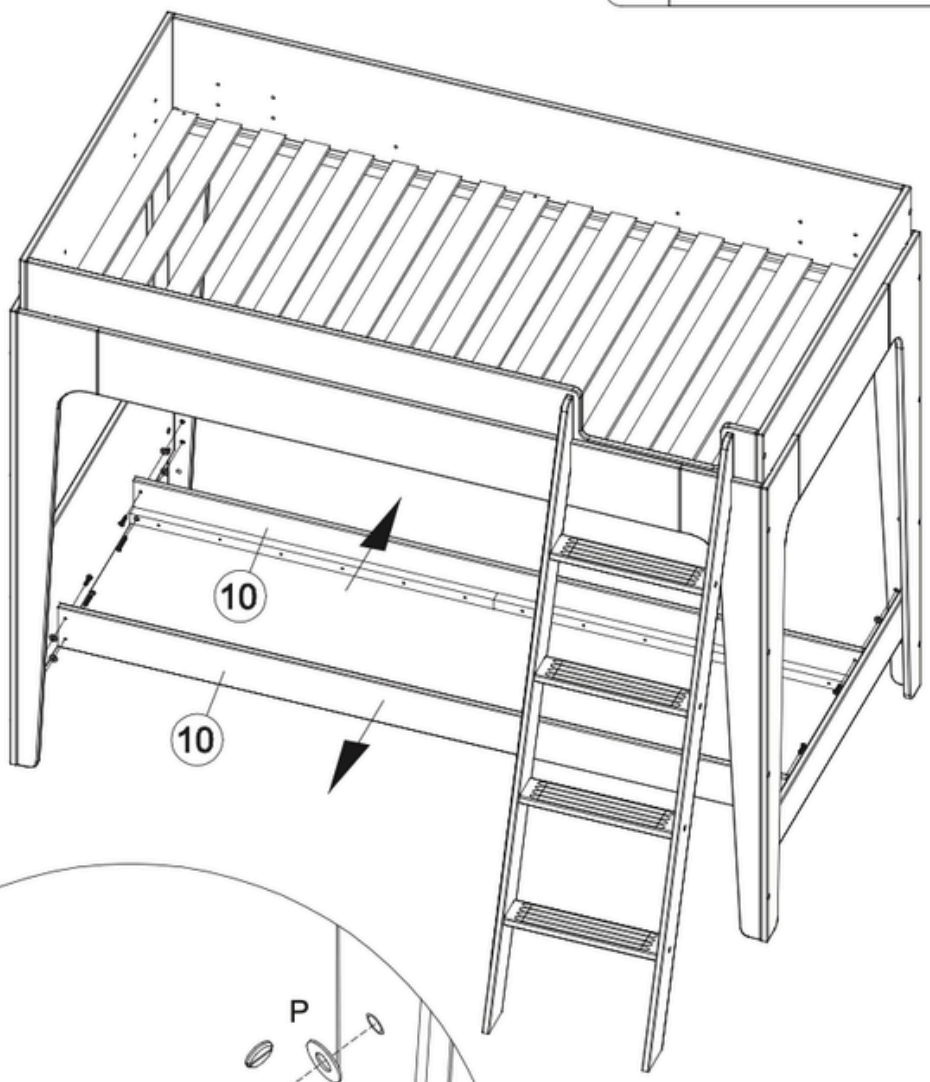


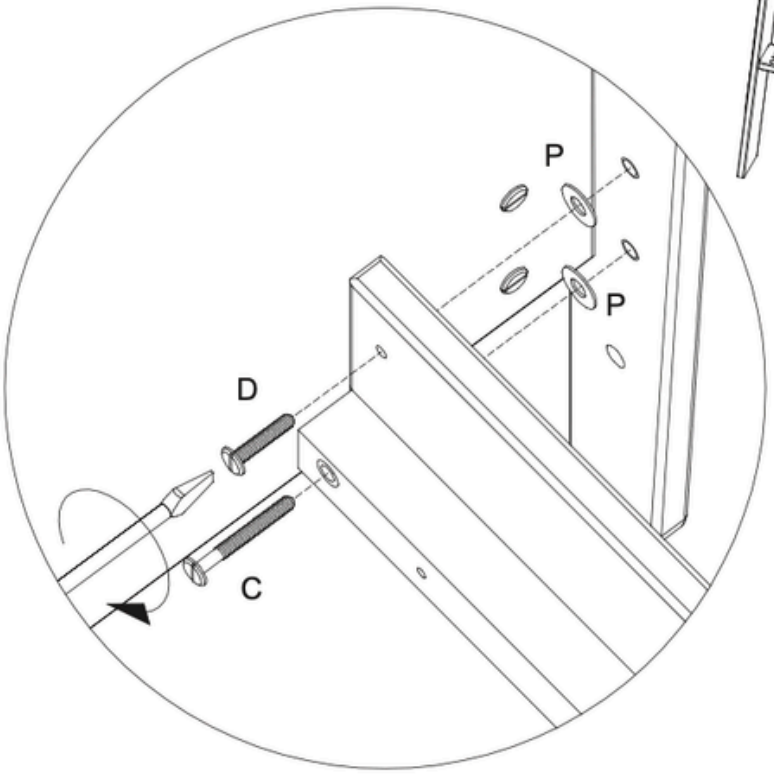

3

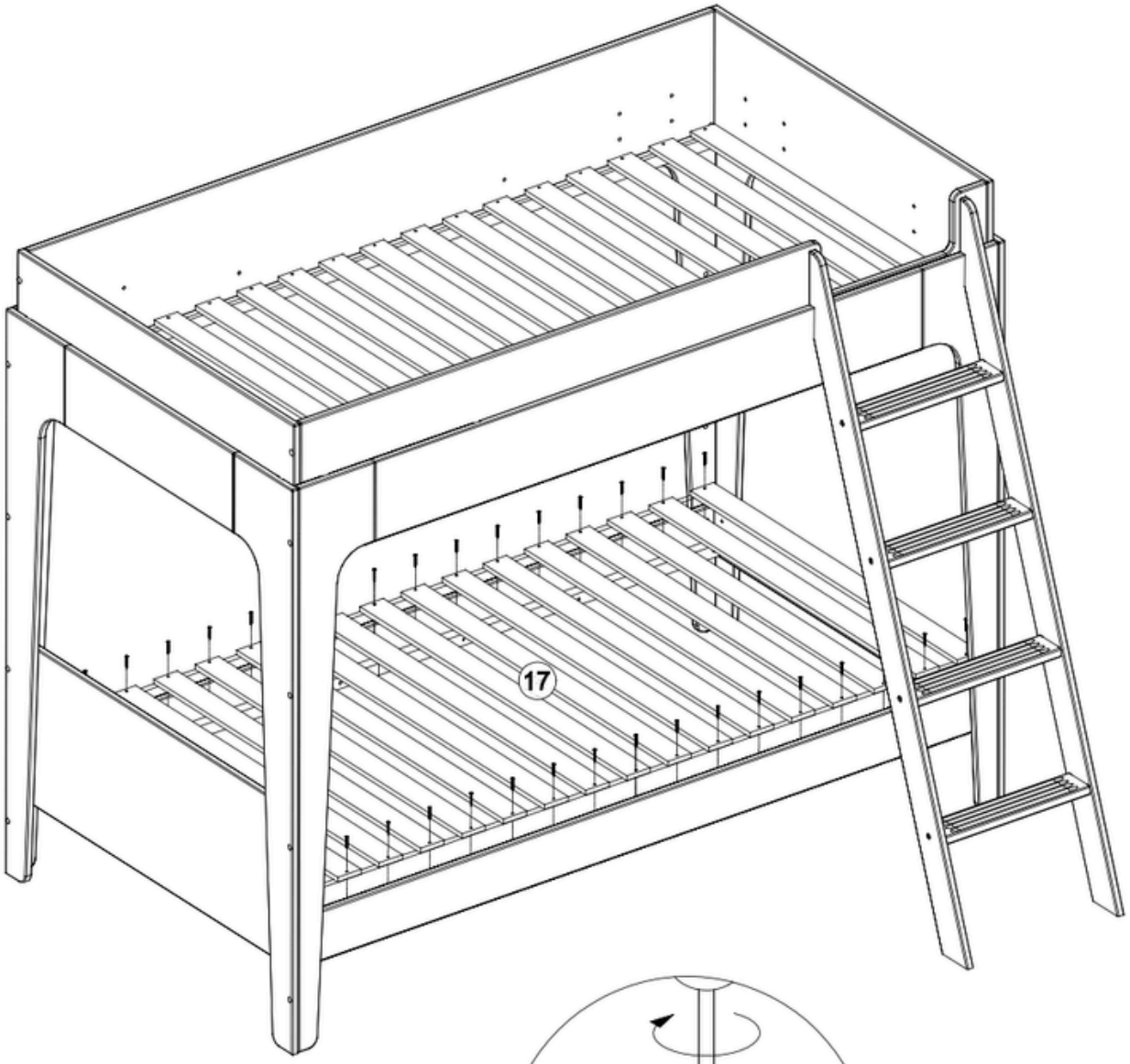


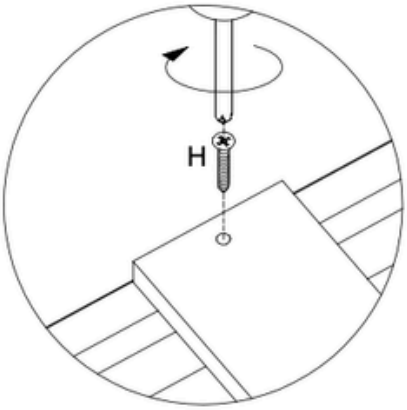

## ELEVATE YOUR KIDDO'S PLAY (LITERALLY!)

Your Pipe Climbers will revolutionize your kiddos' playtime! Gross motor play is vital to proper development!



## NEED HELP PLANNING YOUR PLAYROOM?

Book a personalized Playroom Planning Session with a Groh Product Specialist for expert product recommendations tailored to your space, family, and goals.



## SHARE PHOTOS WITH US!

Please share photos! We love to see how your space has transformed!



**CONTACT US**
shop@grohplayrooms.com

**FIND MORE RESOURCES AT**
www.shopgrohplayrooms.com