

PERCH TWIN LOFT & BUNK BED

BY OEUF

ASSEMBLY GUIDE

WARNING – Improper assembly or use of this product and the activity of climbing has risks that can lead to injury, paralysis, and even death. Read these instructions and warnings before installation and use!

CONTACT US
shop@grohplayrooms.com

FIND MORE RESOURCES AT
shopgrohplayrooms.com

⚠ US & Canadian Safety Warnings

Follow the information on the warnings appearing on the upper bunk end structure and on the carton. Do not remove warning label from bed.

- Use only mattress which is 75” (190 cm) long and 39” (99 cm) wide with a **thickness not greater than 8”** (20 cm) on upper bunk. (**use a standard Twin-size Mattress without a box spring**)
- Always use the recommended size mattress or mattress support, or both, to help prevent the likelihood of entrapment or falls.
- Surface of mattress must be at least 5 in. (127 mm) below the upper edge of guardrails.
- Do not allow children under 6 years of age to use the upper bunk.
- Prohibit more than one person on upper bunk.
- Periodically check and ensure that the guardrail, ladder, and other components are in their proper position, free from damage, and that all connectors are tight.
- Do not allow horseplay on or under the bed and prohibit jumping on the bed.
- Always use the ladder for entering and leaving the upper bunk.
- Do not use substitute parts. Contact the manufacturer or dealer for replacement parts.
- Use of a night light may provide added safety precaution for a child using the upper bunk.
- Always use guardrails on both long sides of the upper bunk. If the bunk bed will be placed next to the wall, the guardrail that runs the full length of the bed should be placed against the wall to prevent entrapment between the bed and wall.
- The use of water or sleep flotation mattresses is prohibited.

⚠ STRANGULATION HAZARD

Never attach or hang items to any part of the bunk bed that are not designed for use with the bed; for example, but not limited to, hooks, belts and jump ropes.

Keep these instructions for future reference.

A UPPER BED components

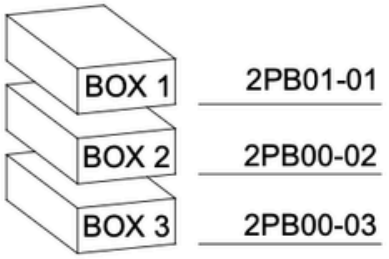

2PB01-01

2PB00-02

2PB00-03



B LOWER BED components

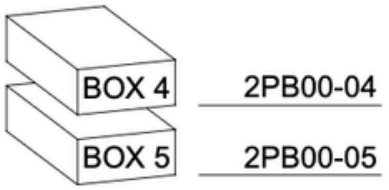

2PB00-04

2PB00-05

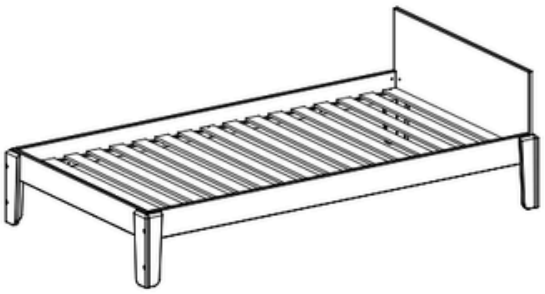

A + B BUNK BED components

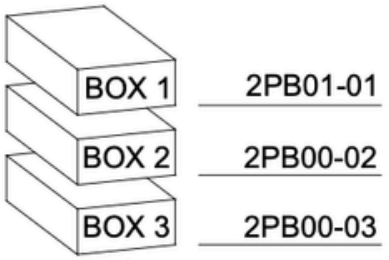

2PB01-01

2PB00-02

2PB00-03

+



2PB00-04

2PB00-05

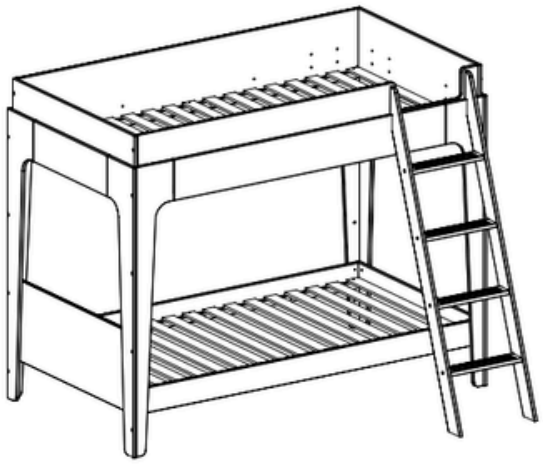

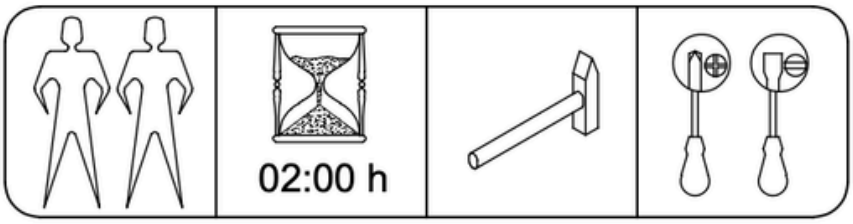



Fittings List - UPPER BED

Liste des Pièces

A		Ø8x40	20	pcs
B	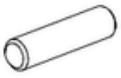	Ø10x40	16	pcs
C		M6x50	24	pcs
D		M6x30	42	pcs
E		M6x65	16	pcs
F		Ø10x14	40	pcs
G			16	pcs
H		Ø4x35	48	pcs

J			2	pcs
K		Ø7x40	4	pcs
L			1	pcs
M		M6x35	4	pcs
N			4	pcs
O			1	pcs
P		Felt Washer	44	pcs

BOX 1

UPPER BED components:
Plywood components of upper bed.

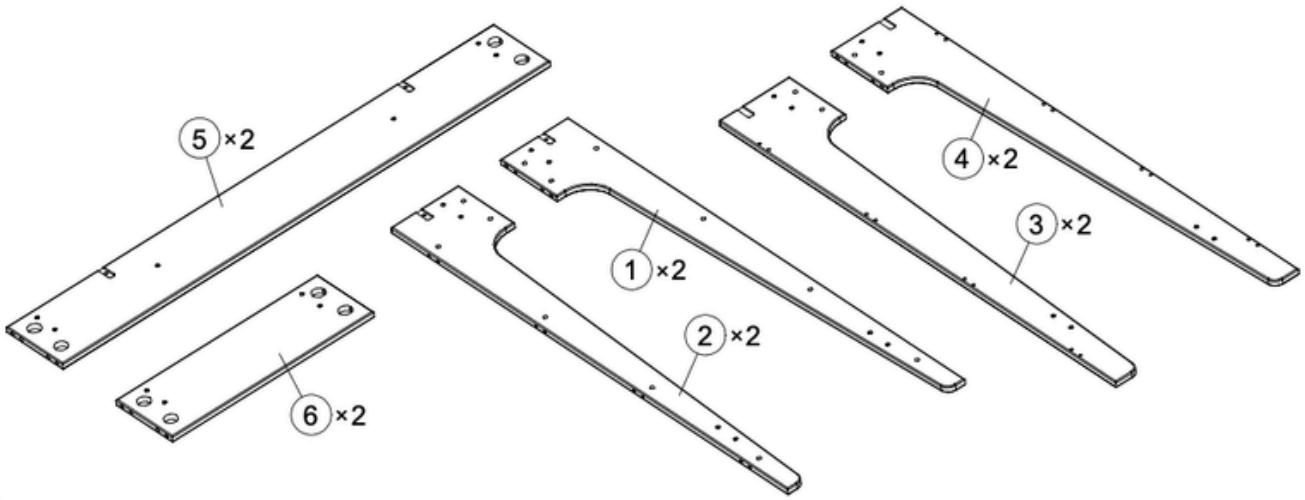

BOX 2

UPPER BED components:
Long bed rails, ladder rails.

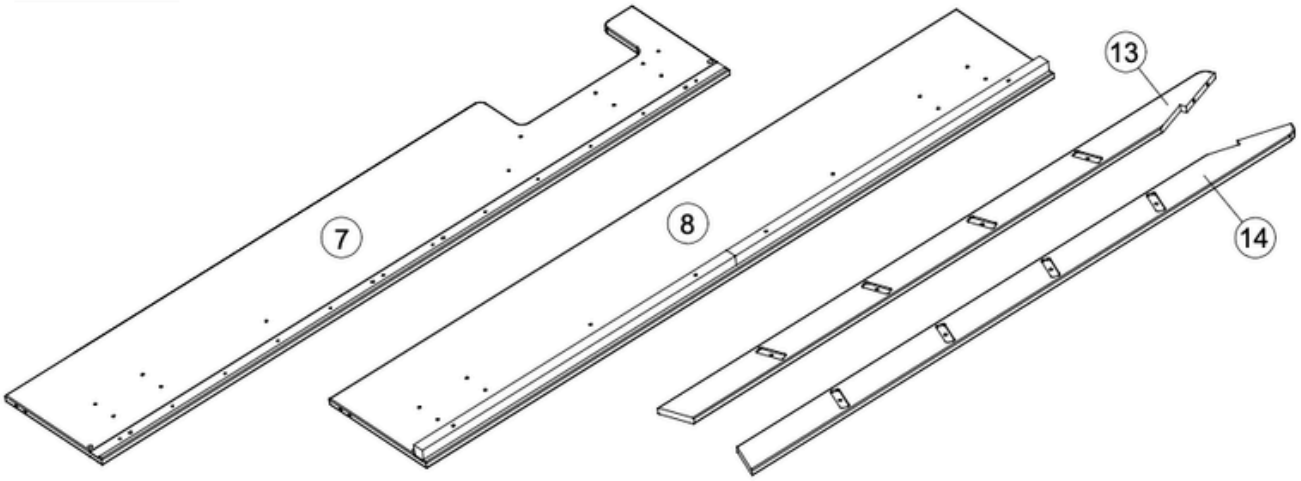

BOX 3

UPPER BED components:
Short bed sides, ladder steps, mattress suport rail, mattress support.

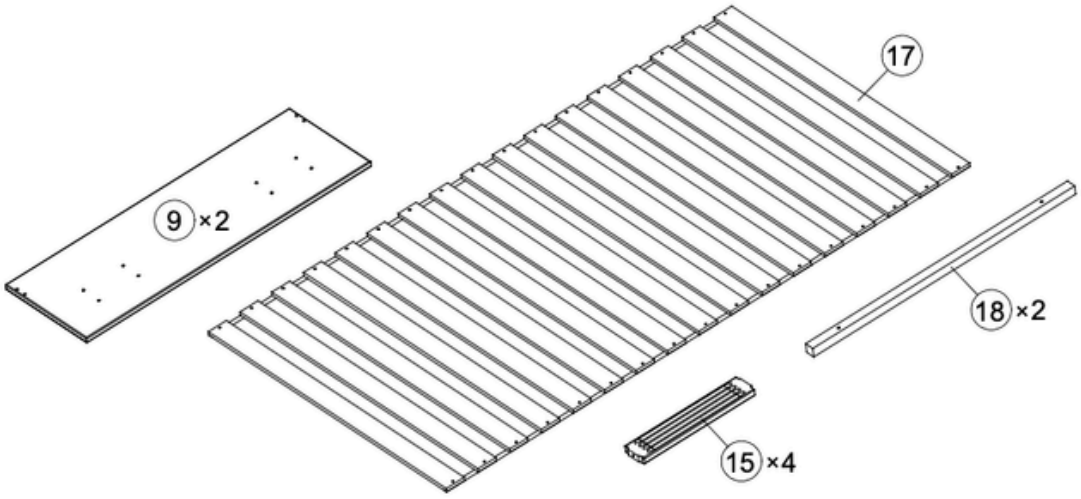

B	Ø10x40	8	pcs
E	M6x65	8	pcs
F	Ø10x14	8	pcs
G		8	pcs
O		1	pcs

1 ×2

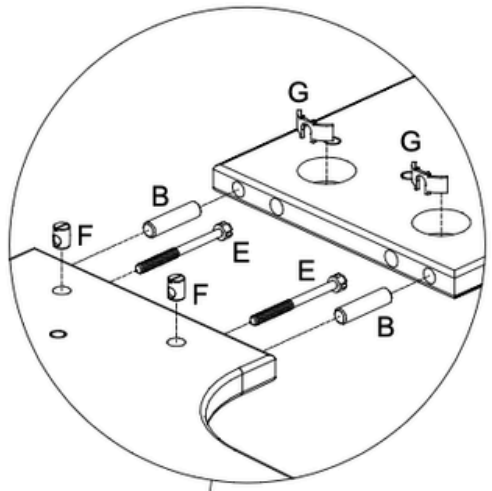

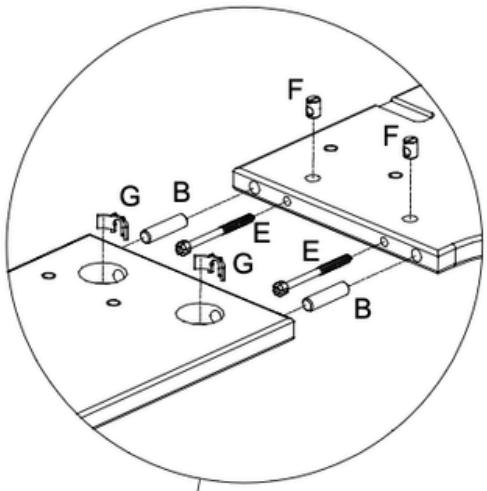

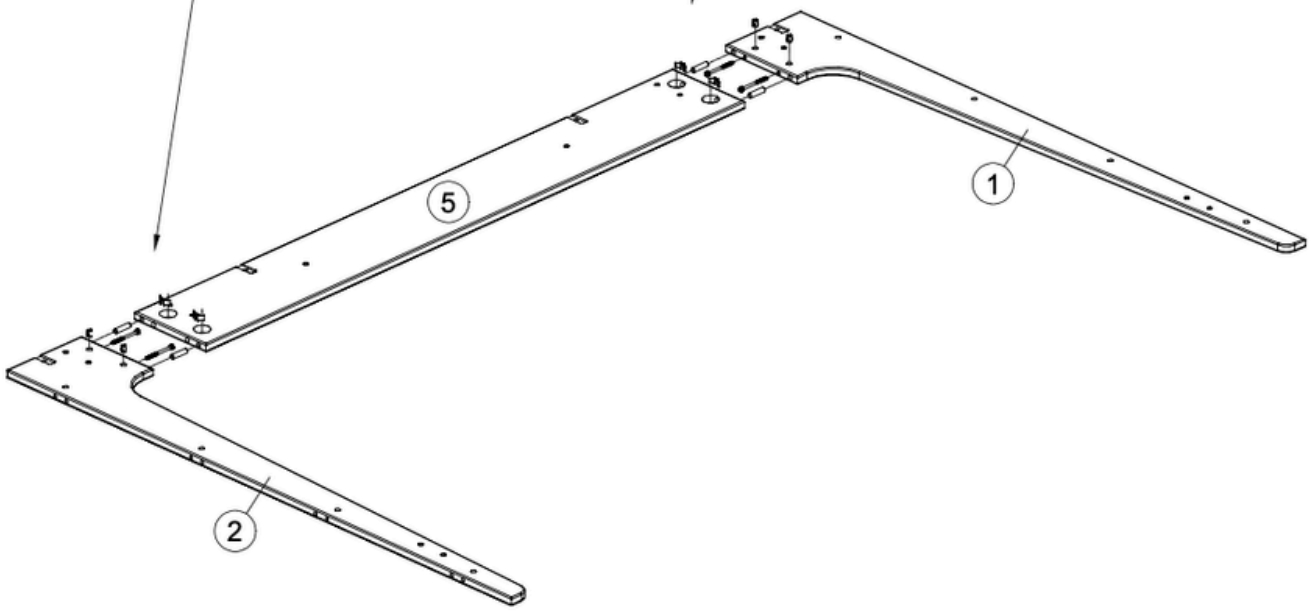

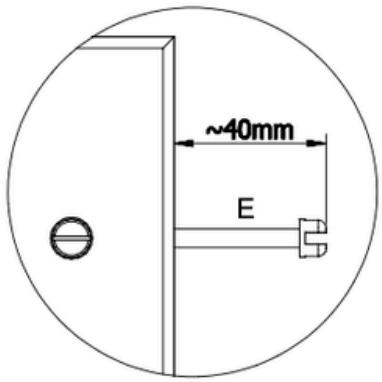

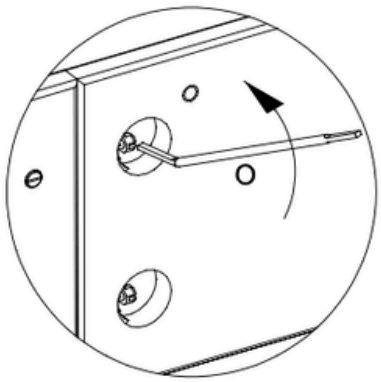

B	Ø10x40	8 pcs
E	M6x65	8 pcs
F	Ø10x14	8 pcs
G		8 pcs
O		1 pcs

2×2

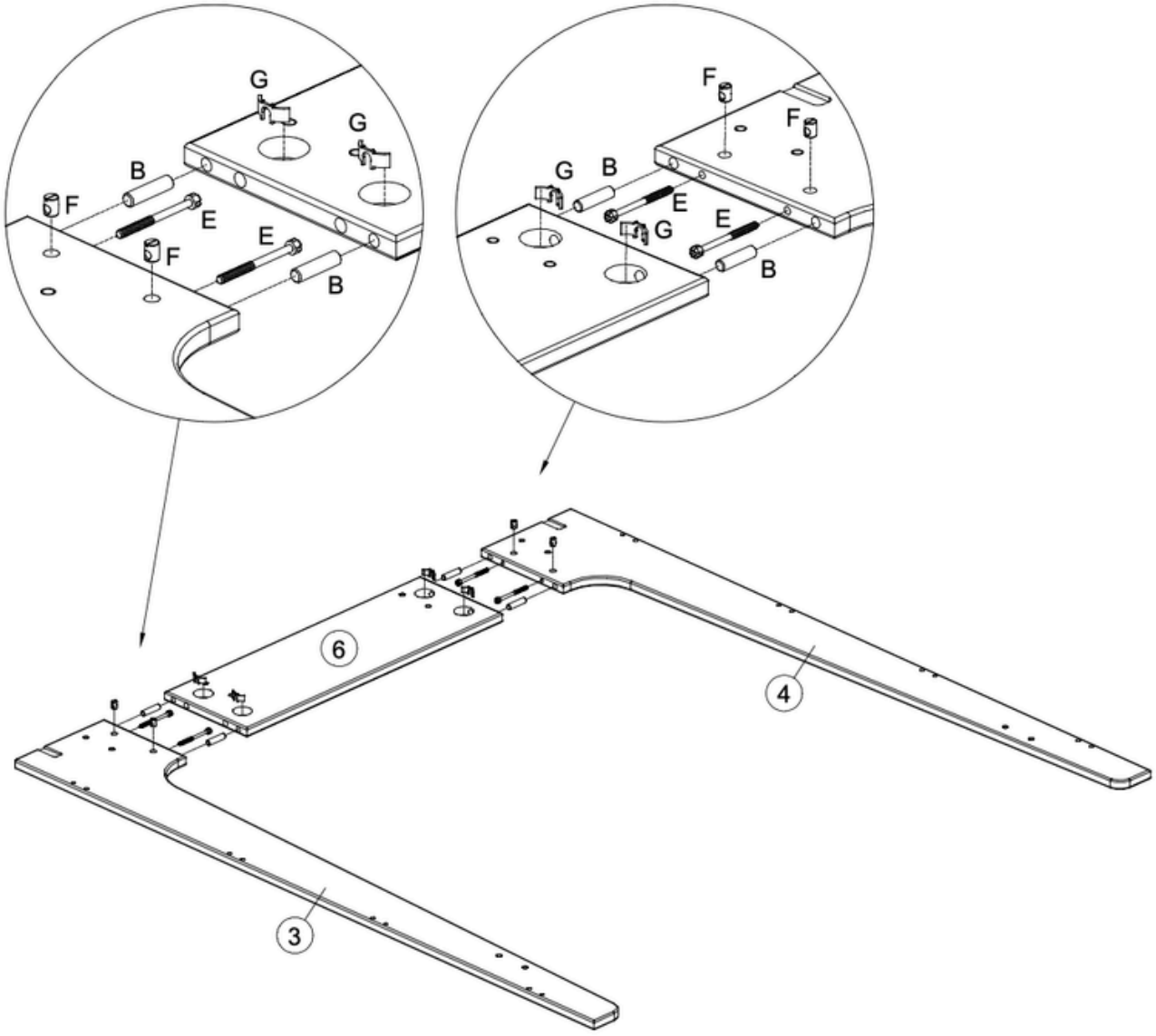

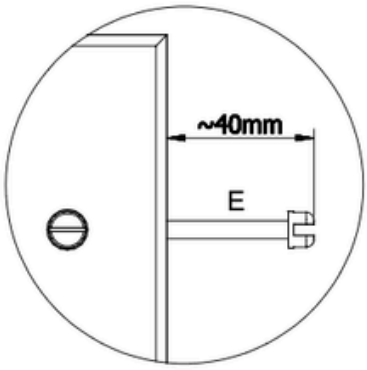

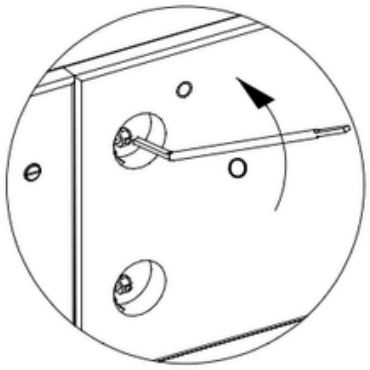

P	Felt Washer	20 pcs

3×2

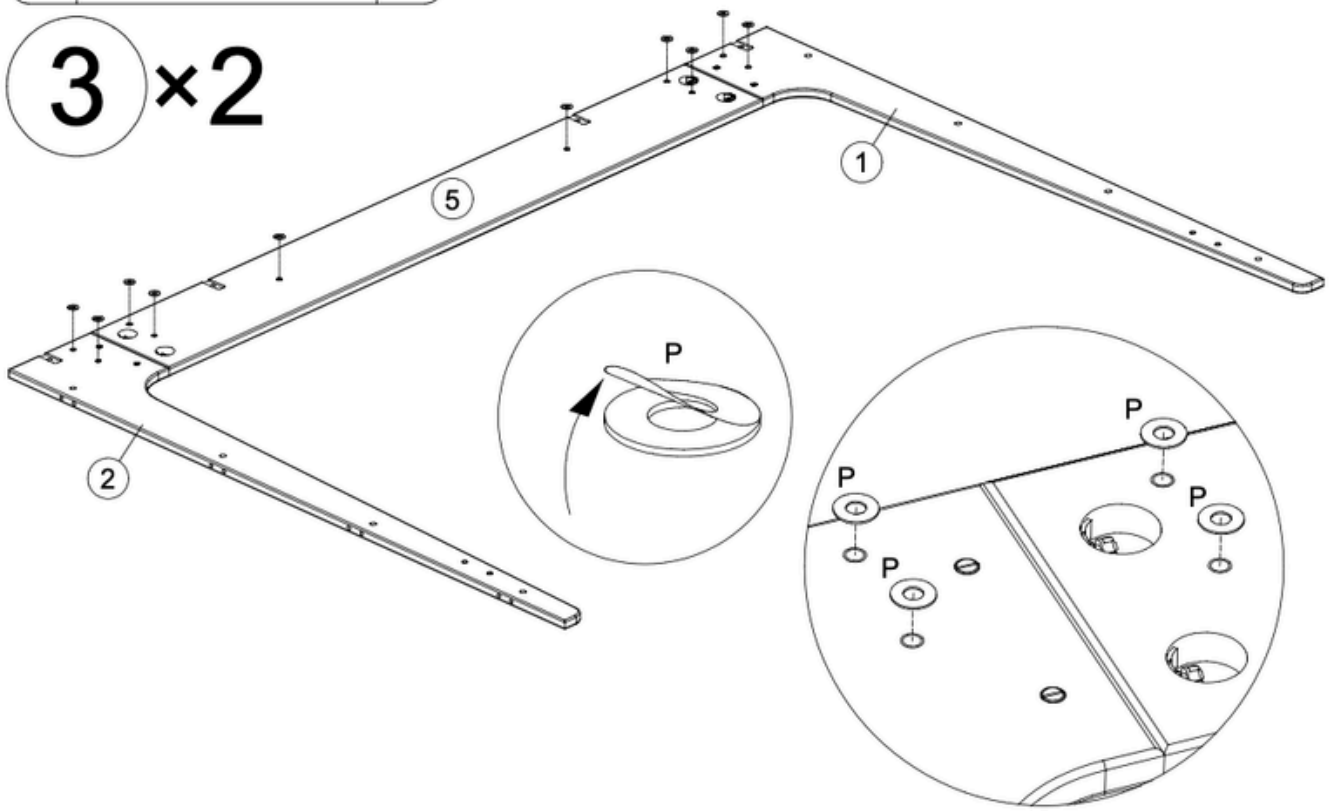

P	Felt Washer	16 pcs

4×2

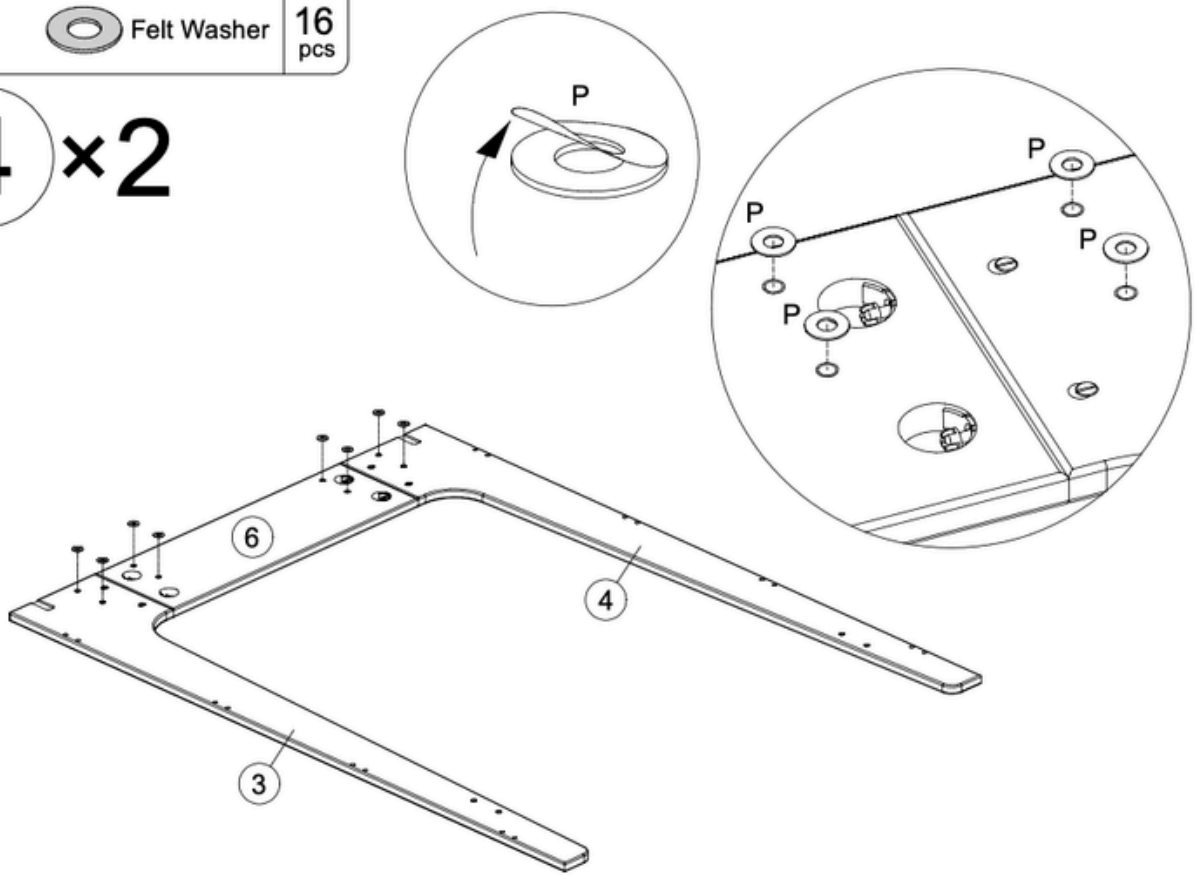

H	Ø4x35	12 pcs
M	M6x35	4 pcs
N		4 pcs
L		1 pcs

5 R



5 L



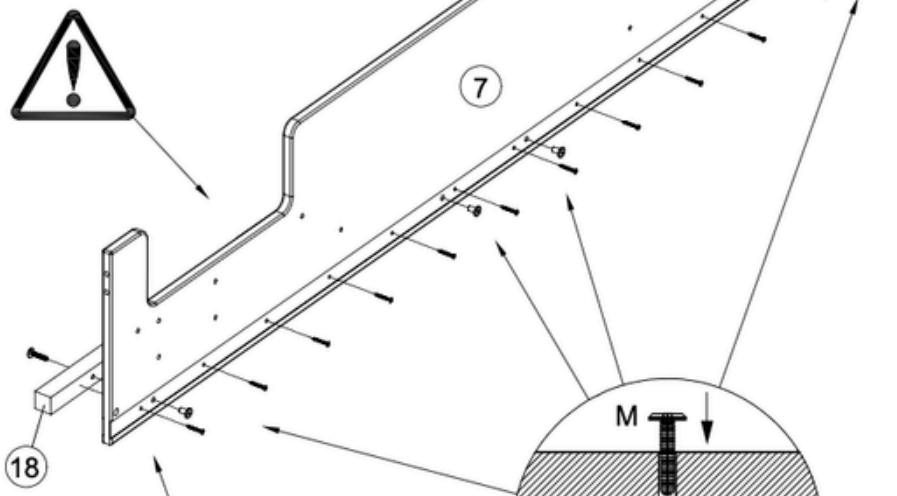

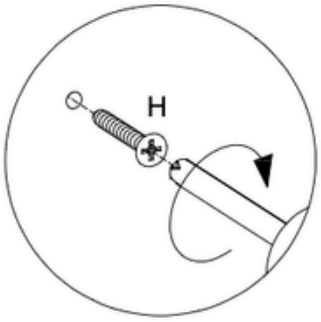

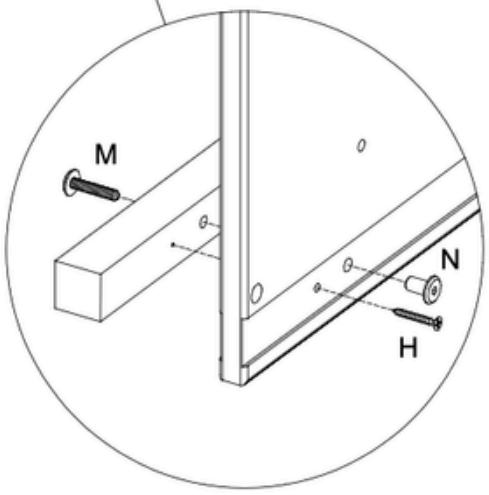

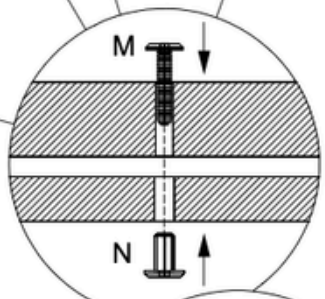

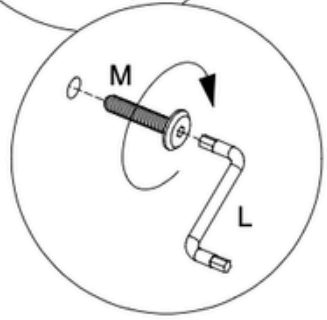

D	M6x30	10 pcs	L		1 pcs

6

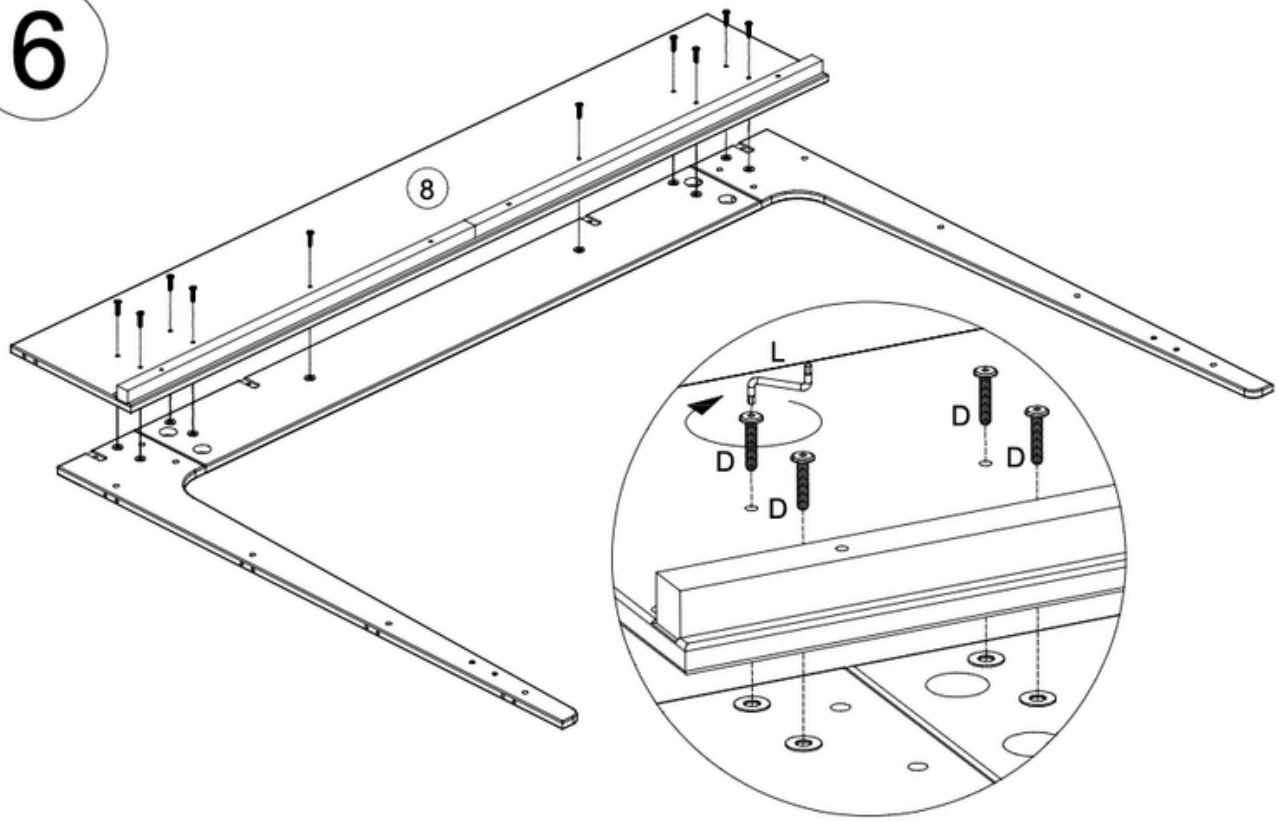

BUNK BED

C	M6x50	2 pcs	D	M6x30	2 pcs
P	Felt Washer	4 pcs	L		1 pcs



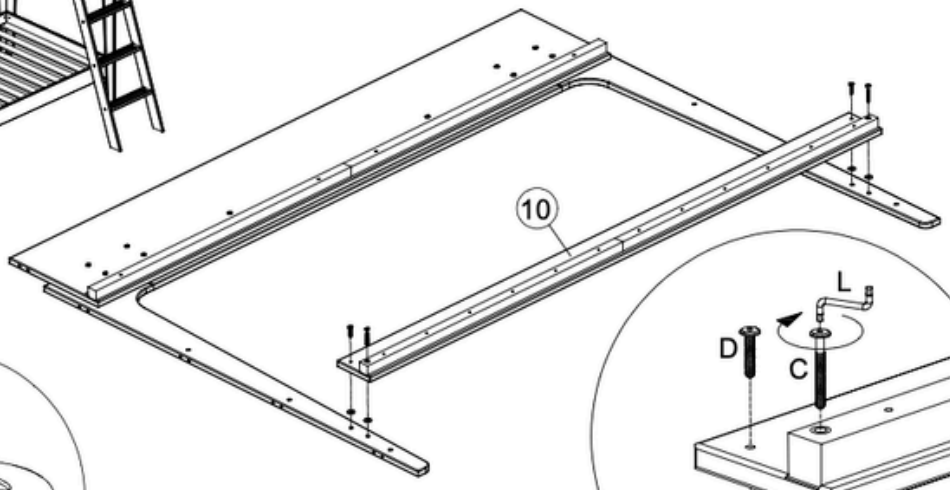

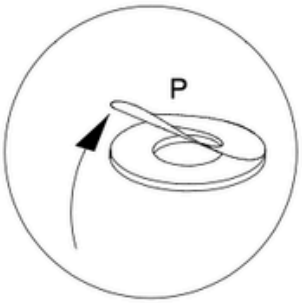

D		M6x30	10 pcs	L	1 pcs

7 R

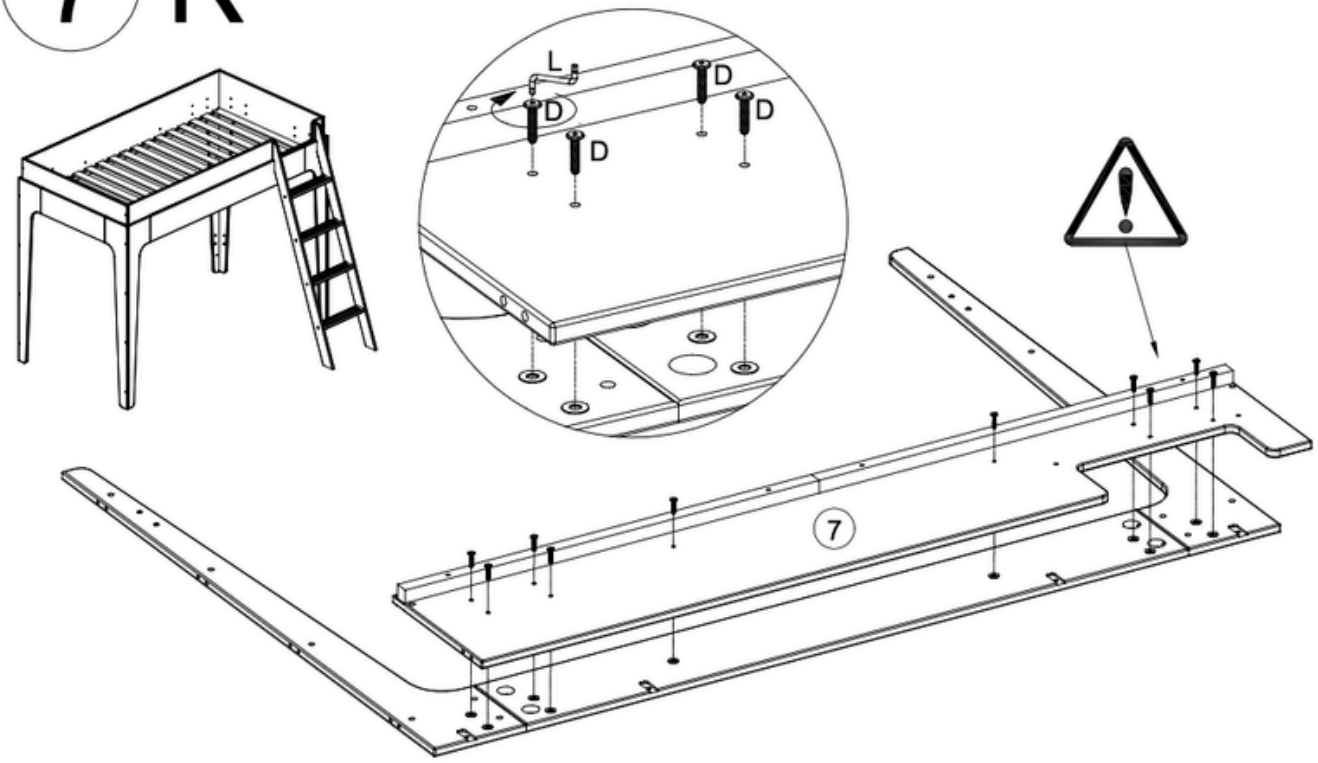

BUNK BED

C		M6x50	2 pcs	D	M6x30	2 pcs
P		Felt Washer	4 pcs	L		1 pcs

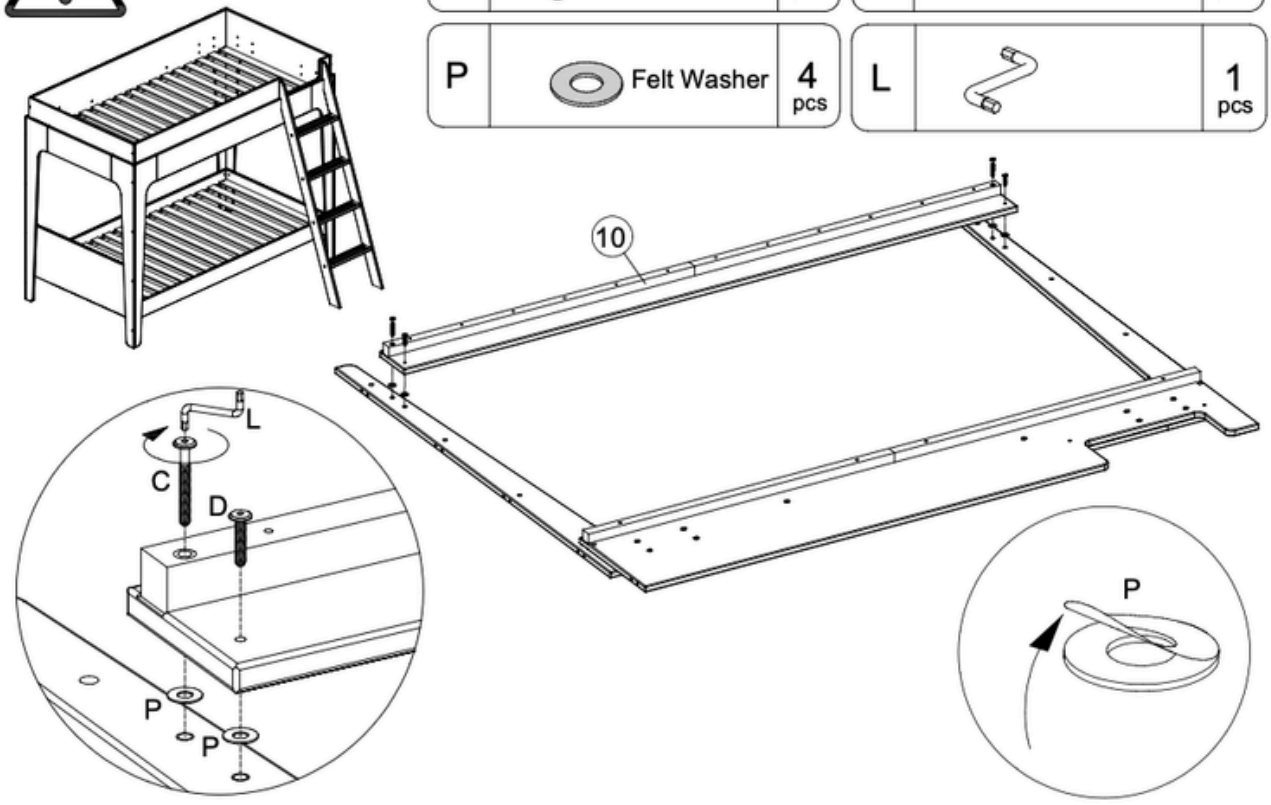

D	M6x30	10 pcs	L		1 pcs

7 L

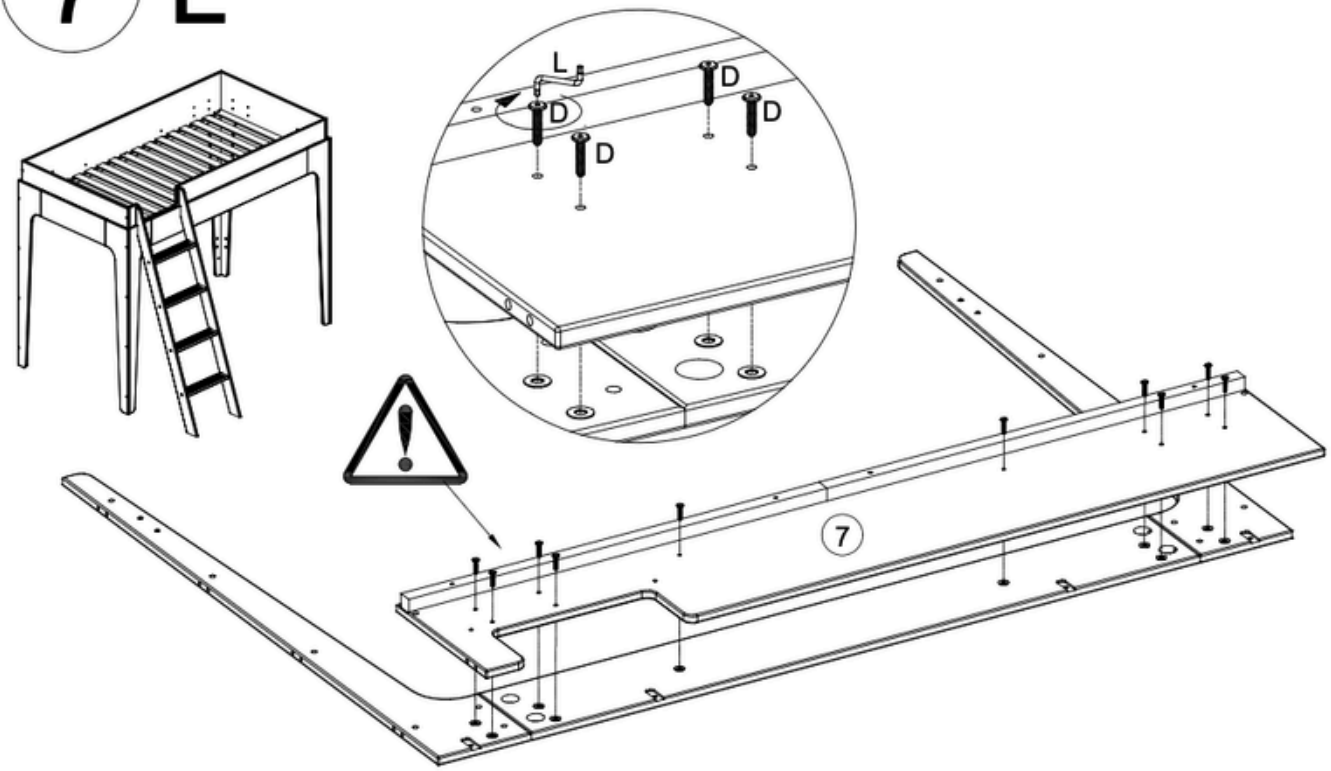

BUNK BED

C	M6x50	2 pcs	D	M6x30	2 pcs
P	Felt Washer	4 pcs	L		1 pcs

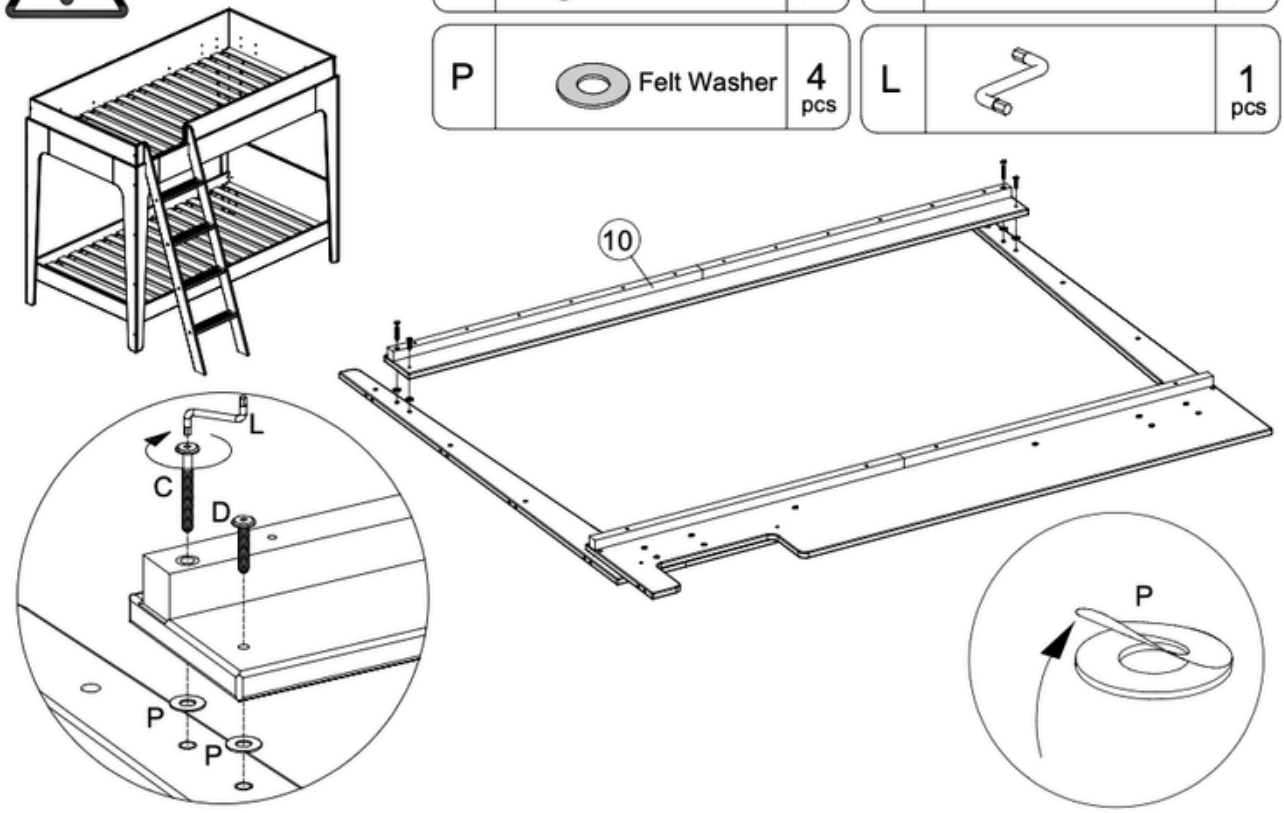

D	M6x30	16 pcs

L		1 pcs

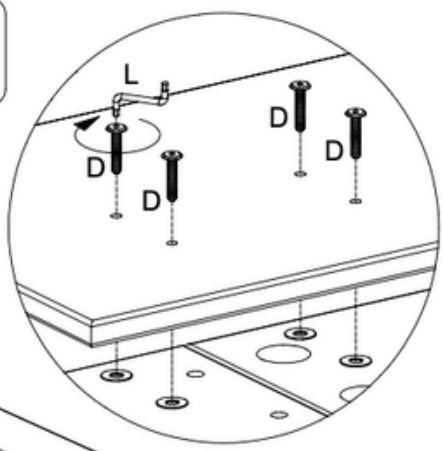

8 ×2

Headbord of upper bed contains the warning statements.

BUNK BED

D	M6x30	8 pcs

P	Felt Washer	10 pcs

L		1 pcs



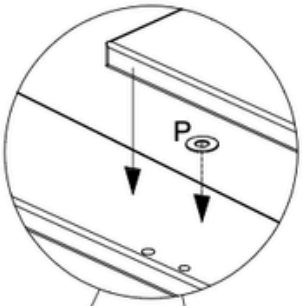

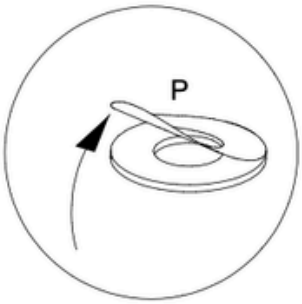

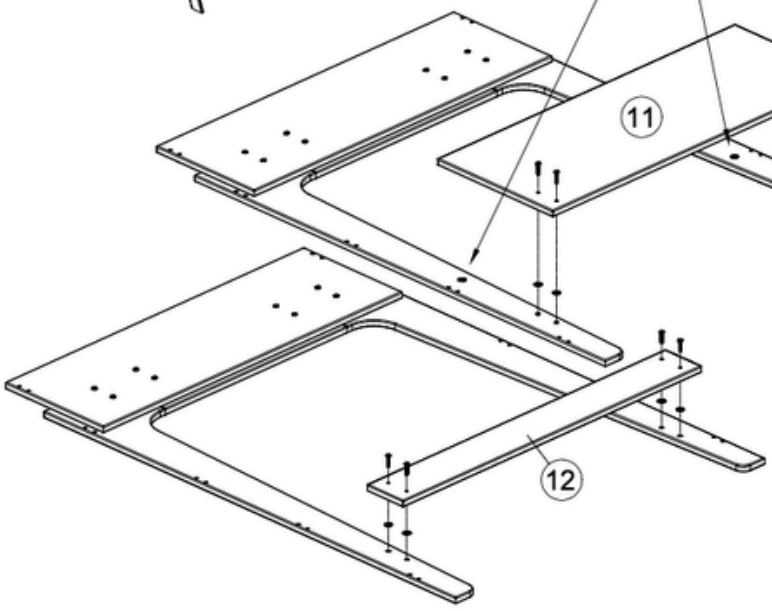

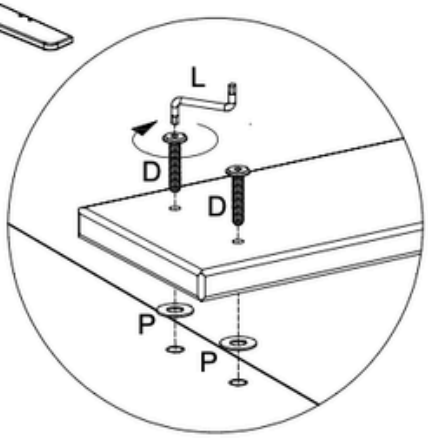

A	Ø8x40	20	pcs
C	M6x50	16	pcs
D	M6x30	4	pcs
F	Ø10x14	16	pcs
L		1	pcs

9

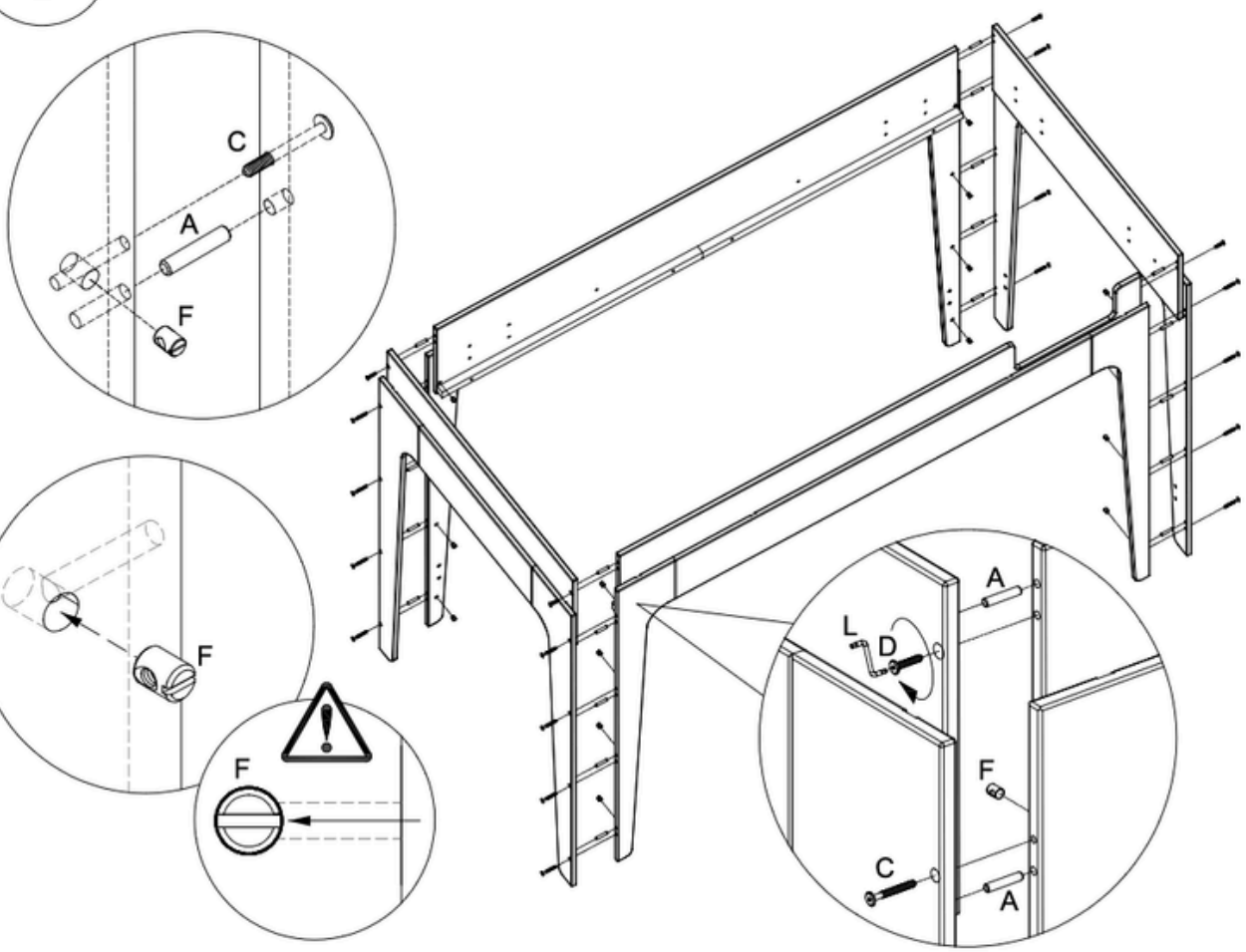

BUNK BED



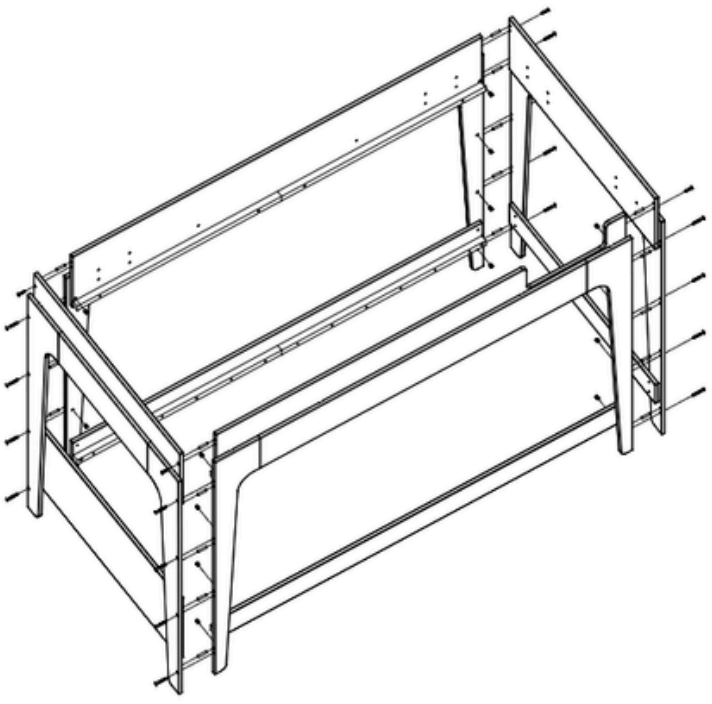

C	M6x50	8 pcs
F	Ø10x14	8 pcs
J		2 pcs
K	Ø7x40	4 pcs
L		1 pcs

10

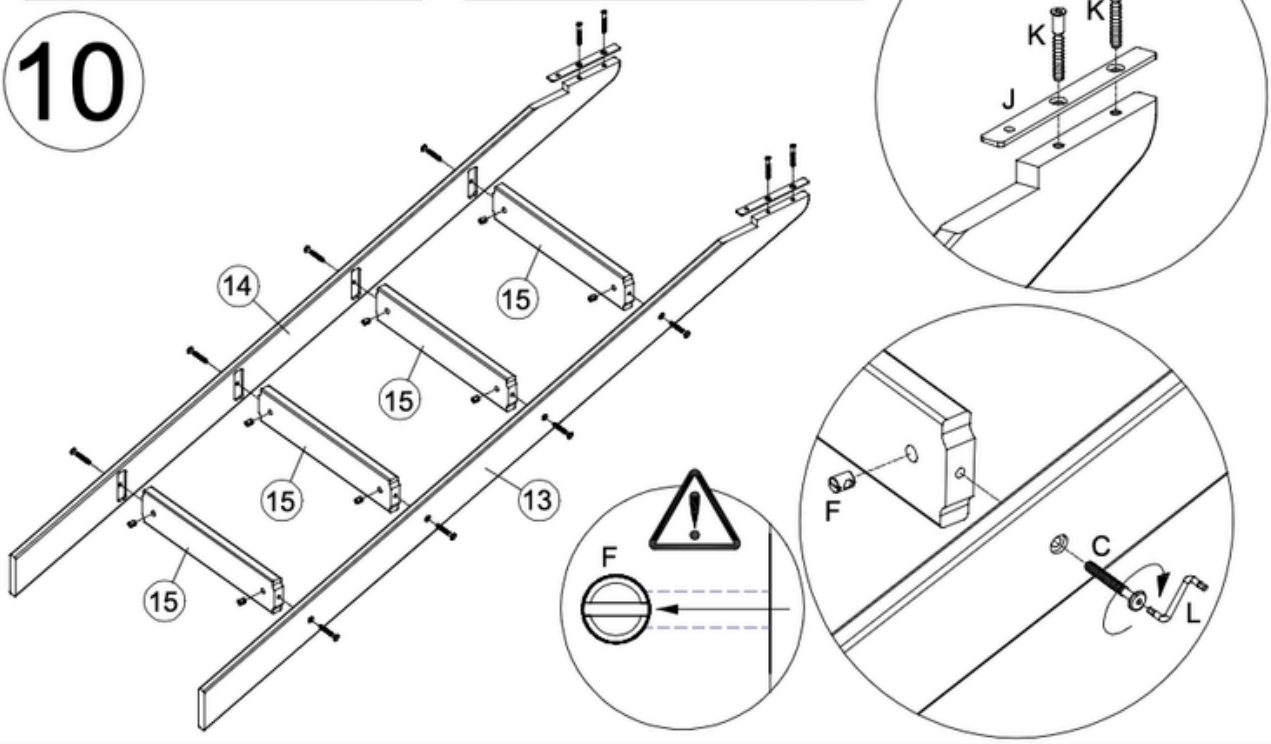

D	M6x30	2 pcs
L		1 pcs

11

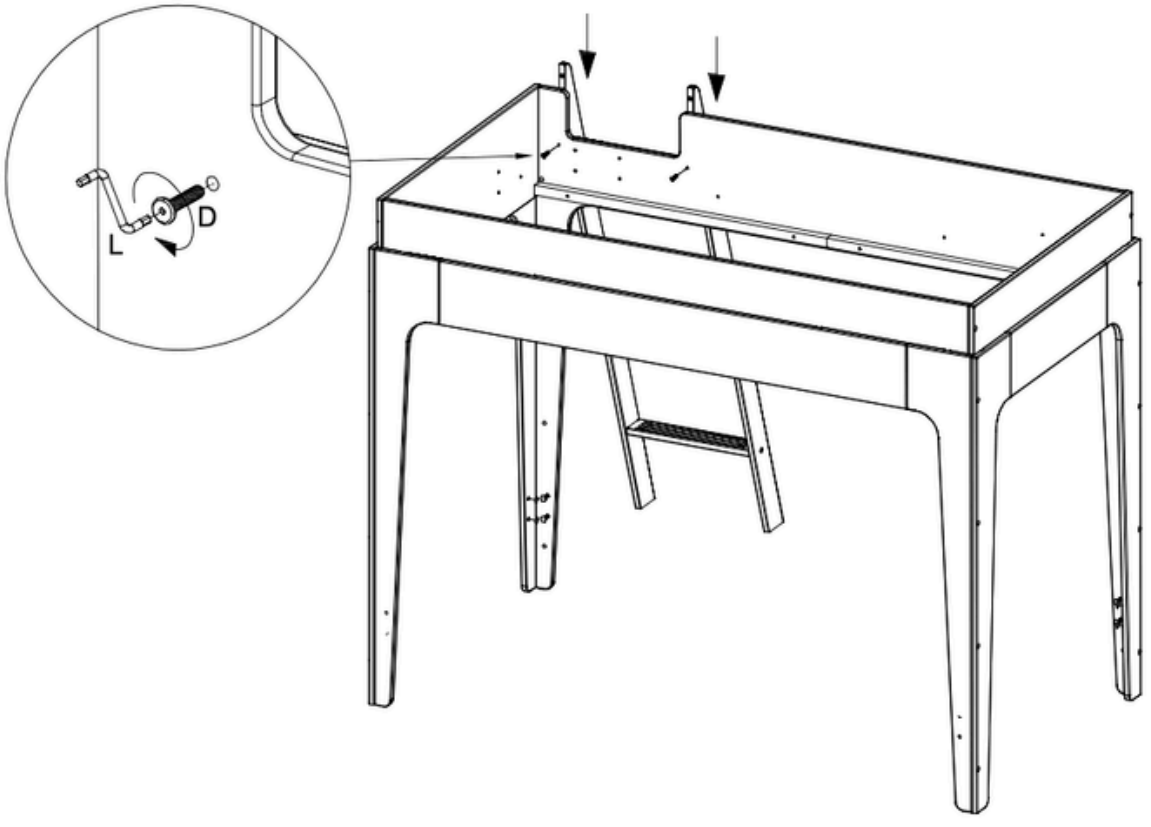

H	Ø4x35	36 pcs

12

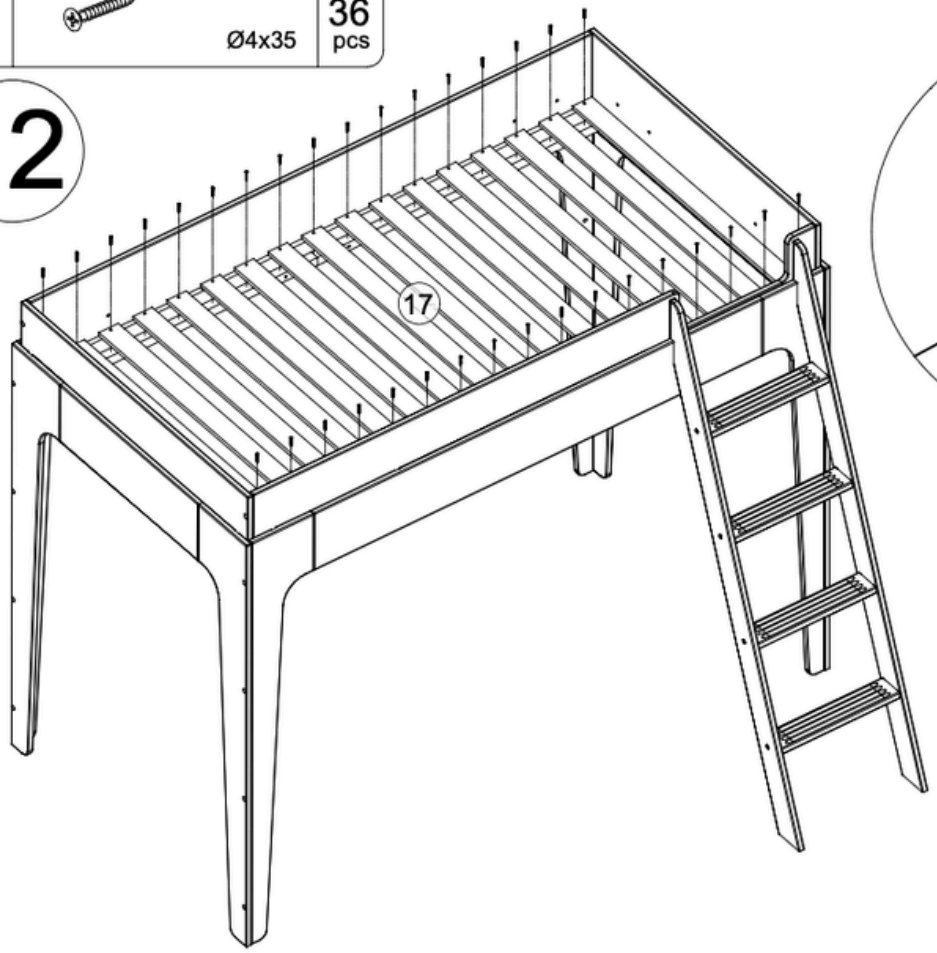

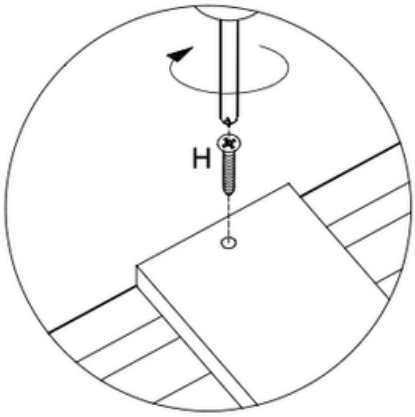

BUNK BED

H	Ø4x35	36 pcs



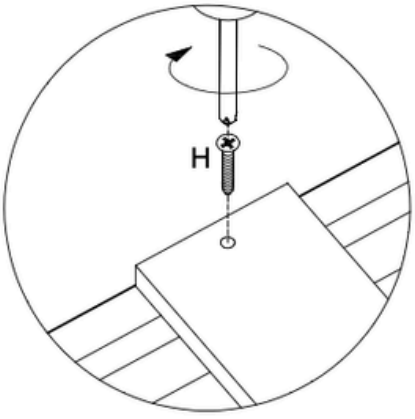

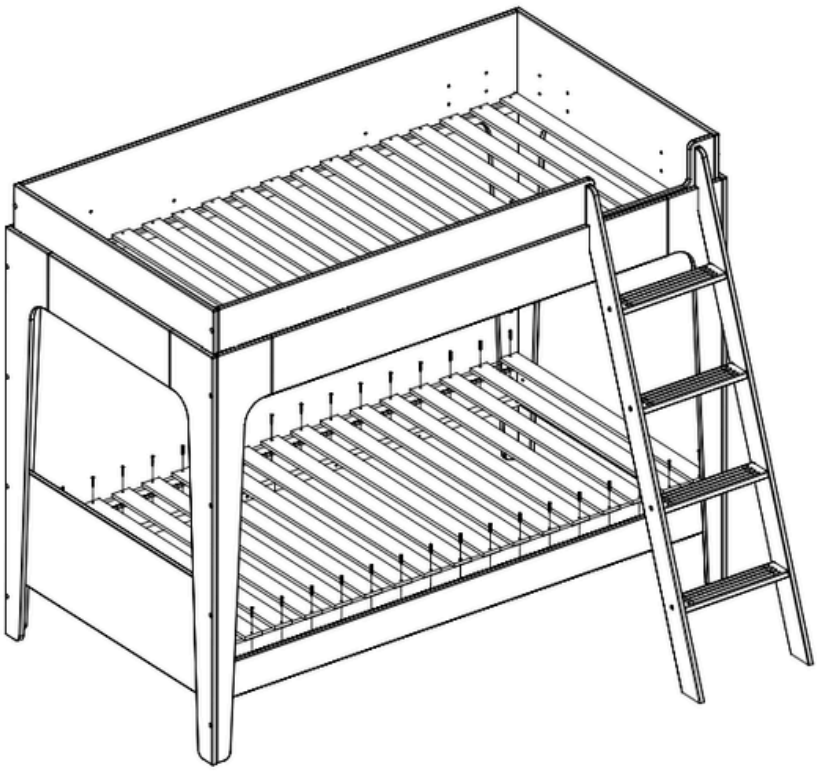

ELEVATE YOUR KIDDO'S PLAY (LITERALLY!)

Your Pipe Climbers will revolutionize your kiddos' playtime! Gross motor play is vital to proper development!



NEED HELP PLANNING YOUR PLAYROOM?

Book a personalized Playroom Planning Session with a Groh Product Specialist for expert product recommendations tailored to your space, family, and goals.



SHARE PHOTOS WITH US!

Please share photos! We love to see how your space has transformed!



CONTACT US
shop@grohplayrooms.com

FIND MORE RESOURCES AT
www.shopgrohplayrooms.com